# CRISTINA

## Spare Parts List

CRIRT24896P | Rota Series | PVD Brushed Gold Brass | Matching metal controls

### How to request a replacement

Provide B&M with the complete SKU CRIRT24896P, purchase details and photographs of the installed product and required component. Match the exact model and production revision before ordering.

| Manufacturer reference | Selection |
|---|---|
| CRIAR8291Q00 | Match original sheet; confirm complete replacement code |
| CRICF24524Q00 | Match original sheet; confirm complete replacement code |
| CRICF6364Q00 | Match original sheet; confirm complete replacement code |
| CRICN23699P | Match original sheet; confirm complete replacement code |
| CRIFS7249Q00 | Match original sheet; confirm complete replacement code |
| CRIMV18902F | Match original sheet; confirm complete replacement code |
| CRIMV18902N | Match original sheet; confirm complete replacement code |
| CRIMV18902W | Match original sheet; confirm complete replacement code |
| CRIMV23511F | Match original sheet; confirm complete replacement code |
| CRIMV23511N | Match original sheet; confirm complete replacement code |
| CRIMV23511W | Match original sheet; confirm complete replacement code |
| CRIMV5399F | Match original sheet; confirm complete replacement code |
| CRIMV5399N | Match original sheet; confirm complete replacement code |
| CRIMV5399W | Match original sheet; confirm complete replacement code |
| CRIPR24939Q | Match original sheet; confirm complete replacement code |
| CRIRI071S | Match original sheet; confirm complete replacement code |
| CRIUD425S | Match original sheet; confirm complete replacement code |
| CRIVT5889Q00 | Match original sheet; confirm complete replacement code |
| CRIVT5890Q00 | Match original sheet; confirm complete replacement code |

### Finish and revision notes

Finish/material-dependent families require the correct suffix. Select 96P PVD Brushed Gold Brass only where the original sheet lists that option. Do not order another finish column or historical revision. Confirm the complete replacement reference before ordering.

Original manufacturer exploded view follows; its callouts, historical notes and finish qualifications are retained.

# ROTA

CRIRT248

**SCHEDA RICAMBI | SPARE PARTS SHEET**
rev.01_04/2023

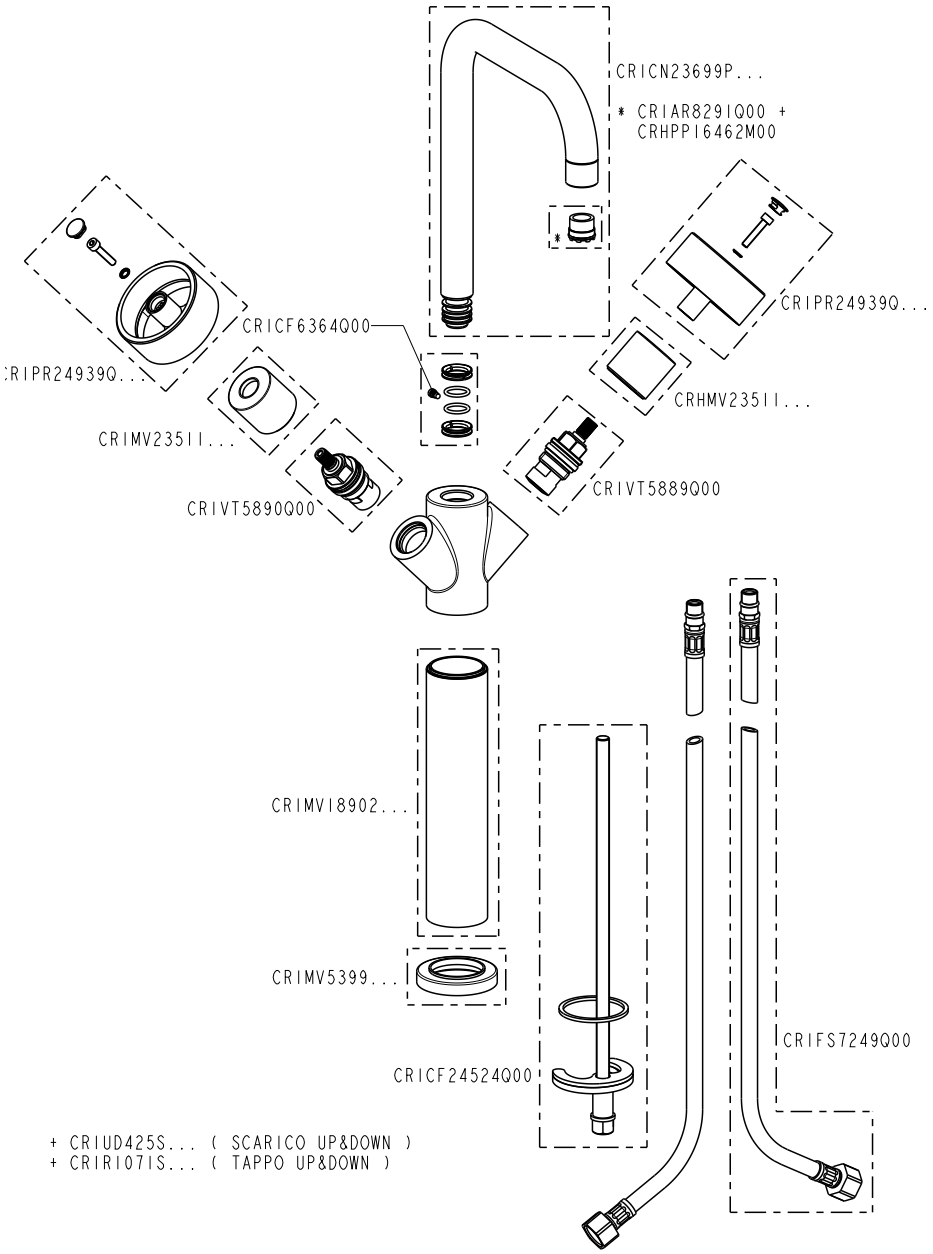


**NOTE | NOTES**

* completare con codice finitura | complete with finishing code

**CRISTINA S.r.l. a socio unico**
via G. Fava, 56 - 28024 Gozzano (NO) Italy - phone +39 0322 9545
fax +39 0322 956556 - info@cristinagroup.com
cristinarubinetterie.com

CRISTINA
RUBINETTERIE